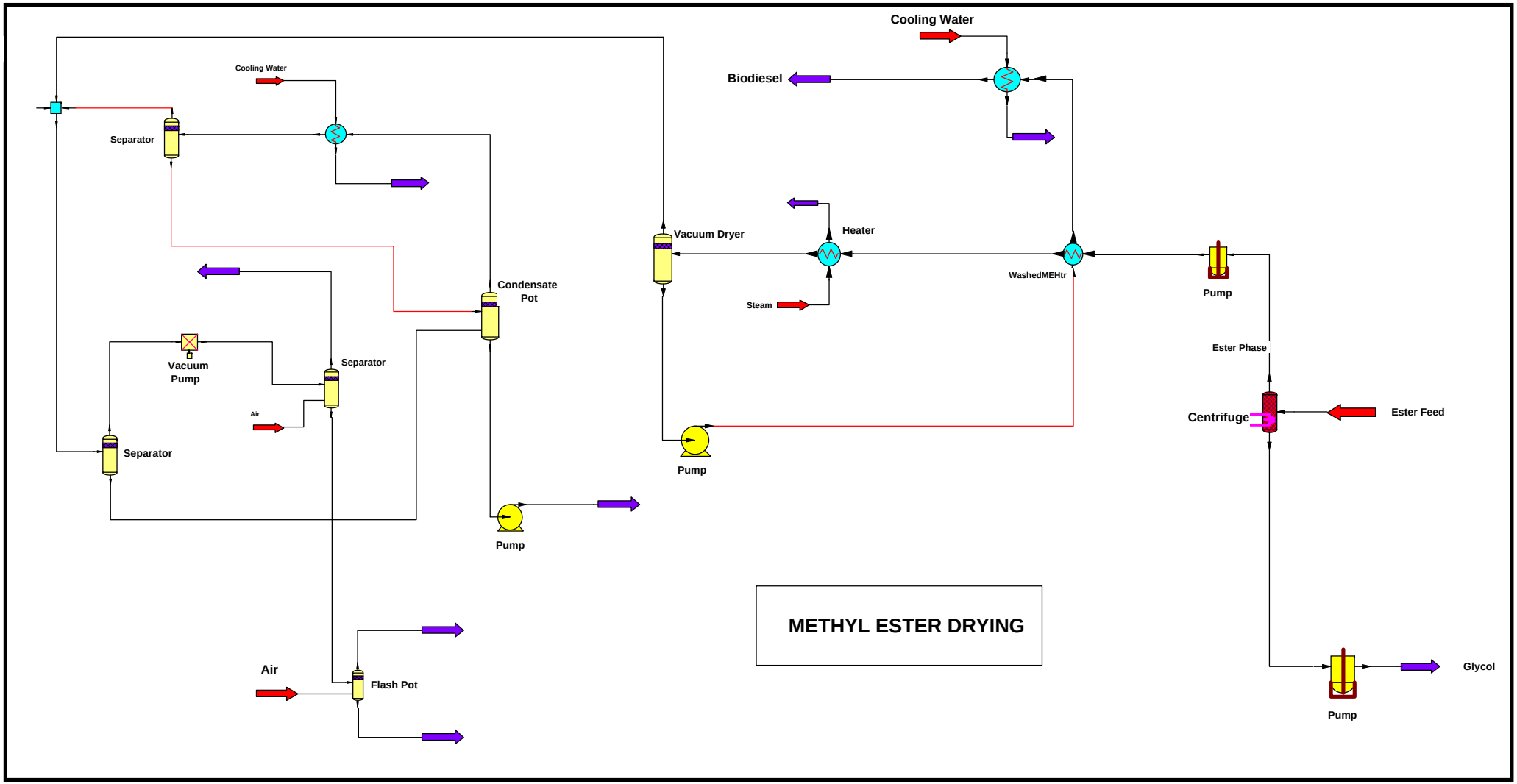
Cooling Water
Separator
Cooling Water
Biodiesel
Vacuum Dryer
Heater
Steam
WashedMEHtr
Pump
Condensate Pot
Vacuum Pump
Separator
Air
Separator
Pump
Ester Phase
Centrifuge
Ester Feed
Pump
METHYL ESTER DRYING
Air
Flash Pot
Pump
Glycol